Journal of Studies in Science and Engineering

EngiScience Publisher

Research Article

Design, Development, and Testing of a Compact Underwater ROV for Inspection and Exploration

Mohd Shahrieel Mohd Aras [1,*], Teoh Xi Yin [1], Fauzal Naim Zohedi [1], Mohd Bazli Bahar [1], Mohamad Haniff Harun [1], Alias Khamis [1], Zairi Ismael Rizman [2]

[1] Mechatronic Engineering Department, Faculty of Electrical Technology and Engineering, Universiti Teknikal Malaysia Melaka, Durian, 76100, Malaysia

[2] School of Electrical Engineering, College of Engineering, Universiti Teknologi MARA, Dungun, Terengganu, 23000, Malaysia

*Corresponding Author: Mohd Shahrieel Mohd Aras, E-mail: shahrieel@utem.edu.my

Article Info

Article History

Received Aug 04, 2024

Revised Feb 25, 2025

Accepted Mar 09, 2025

Keywords

Unmanned underwater remotely operated vehicle

Underwater inspection

Small scale

Prototype development

Fusion 360

Abstract

Underwater exploration has long been a high-risk endeavor requiring trained divers and specialized equipment, creating a growing demand for low-cost, safe, and efficient alternatives. This study presents the design and development of a four-degree-of-freedom (4-DOF) underwater Remotely Operated Vehicle (ROV) aimed at performing basic submerged inspection tasks. The ROV is designed using Fusion 360 software, with finite element analysis (FEA) ensuring structural integrity under underwater pressure. Key performance metrics, including buoyancy, acceleration, velocity, and stability, are evaluated to validate the system's operation. The final deliverable is a durable, lightweight acrylic ROV frame with negative 90% buoyancy, equipped with sensors, cameras, and weatherproof housing for full underwater functionality. An Arduino Uno microcontroller manages the control system, enabling real-time integration of sensors and camera feeds. This project offers a scalable, low-cost solution for small-scale underwater applications, providing a foundation for future enhancements in maneuverability and data acquisition.

Copyright: © 2025 Mohd Shahrieel Mohd Aras, Teoh Xi Yin, Fauzal Naim Zohedi, Mohd Bazli Bahar, Mohamad Haniff Harun,, Alias Khamis, and Zairi Ismael Rizman. This article is an open-access article distributed under the terms and conditions of the Creative Commons Attribution (CC BY 4.0) license.

1. Introduction

ROVs are underwater robotic devices used by operators on land or divers in the water to explore the depths of large bodies of water [1]. They enable the investigation of underwater environments without requiring direct human presence, as they are controlled remotely through wires or tethers that transmit electrical signals between the operator and the vehicle. ROV operations are typically safer and more efficient than human diving operations, enabling operators to stay on deck while exploring areas too deep or hazardous for human divers. Additionally, ROVs can remain submerged far longer than human divers, extending exploration times.

While the oil and gas industry is the primary user of ROVs, these devices are also widely employed

across various sectors, including scientific research, military operations, and marine salvage efforts [2-5]. ROV chassis are usually constructed from lightweight yet durable materials, such as aluminum, with large flotation packs attached to achieve the desired buoyancy and underwater maneuverability. Synthetic foams are often employed as flotation materials [6]. To enhance stability, most ROV designs position heavier components toward the bottom of the frame. However, specific ROV designs are tailored to meet the unique requirements of different users and industries [7-11].

This study aims to design and develop a four-degree-of-freedom (DOF) ROV capable of executing basic underwater tasks while delivering analyzed, user-friendly performance data. The design process utilizes Fusion 360 software to model the ROV's body frame, followed by FEA to ensure the structure can withstand underwater pressures up to a depth of five meters. Once validated, the design will be prepared for fabrication via laser cutting. The ROV's performance will then be evaluated based on buoyancy, acceleration, velocity, and stability metrics, as detailed in the Results and Discussion sections.

2. Literature Review

Underwater ROVs are typically equipped with cameras, lighting systems, manipulators, thrusters, robotic arms, and protective outer structures (Figure 1) to facilitate underwater operations and prevent collisions [12-14]. Essential electrical components are usually housed in oil- or gas-filled chambers to protect them from seawater corrosion and the high pressures encountered at depth.

Figure 1. Work class ROV with an open box frame ROV design [12]

Past research has focused extensively on structural design and material choices for ROVs to optimize underwater performance. Aluminum frames, for instance, provide an effective balance between strength

and weight, while synthetic foam has emerged as a standard flotation material due to its buoyancy properties [6]. Designs often prioritize weight distribution, placing heavier elements at the base to maintain the vehicle's stability and balance during operation [9-11].

Beyond structural considerations, modern ROVs are increasingly designed for multifunctionality, enabling their adaptation across various industries, including oil and gas exploration, military surveillance, environmental monitoring and underwater archaeology [3, 5]. Advances in control systems, sensor integration, and propulsion mechanisms have further expanded the operational capacities of ROVs, making them indispensable tools for underwater exploration and intervention.

Despite these advances, a need remains for adaptable, mid-sized ROV systems that strike a balance between simplicity, cost efficiency, and the ability to deliver precise operational data to users. This study addresses this gap by developing a four-DOF ROV optimized through software-aided design and validated via performance analysis under controlled underwater conditions.

3. Materials and Methods

The ROV design can only have a maximum of 6 degrees of freedom. The designed 6-DOF ROV can move independently in six possible orientations in three-dimensional space. Table 1 [15] lists directions in which the 6-DOF ROV can be moved.

Table 1. Designed 6-DOF ROV

No.	Orientation	Movement	Description
1	Surge	Forward/reverse movement	Longitudinal movement along the horizontal plane. The forward movement is positive
2	Sway	Sideways movement (left/right lateral motion)	Lateral movement along horizontal planes Left lateral motion is positive
3	Heave	Vertical up/down movement	Vertical movement along horizontal planes Vertical up movement is positive
4	Yaw	Rotation around the vertical axis	Rotation around vertical axis (z-axis)
5	Pitch	Rotation around the lateral axis	Rotation around lateral axis (y-axis)
6	Roll	Rotation around the longitudinalaxis.	Rotation around lateral axis (x-axis)

Figure 3 illustrates the project's k-chart. K-ChartTM is a unique new tool for organizing and managing research projects. A tree diagram organizes the topics under examination, technique, and expected results [16, 17]. A K-ChartTM provides a more comprehensive view of the study project than a Gantt chart. Figure 4 depicts the project's flow chart.

ROV design and development involve mechanical, electrical, and software components. To create the overall prototype of the ROV, the body structure must be drawn using the software Fusion 360, as illustrated in Figures 5 and 6. To verify the underwater endurance of the prototype design, a finite element analysis is performed to identify potential failure sites and enhance the overall structural robustness of the ROV [18-20]. After the finite analysis of the prototype is accomplished, the fabrication process will begin.

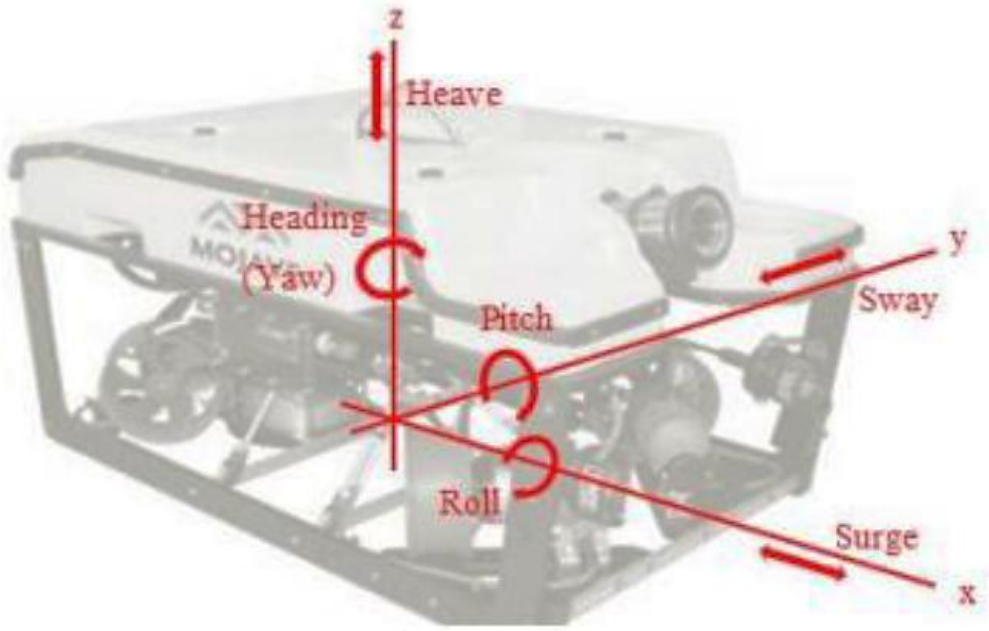

Figure 2. The 6-DOF ROV [15]

3.1. Comparison of Different Designations of ROV

After a detailed analysis of each journal, a table is created that compares the journals based on certain parameters, as tabulated in Table 2. This step can be advantageous for benchmarking, justifying choices, and facilitating decision-making.

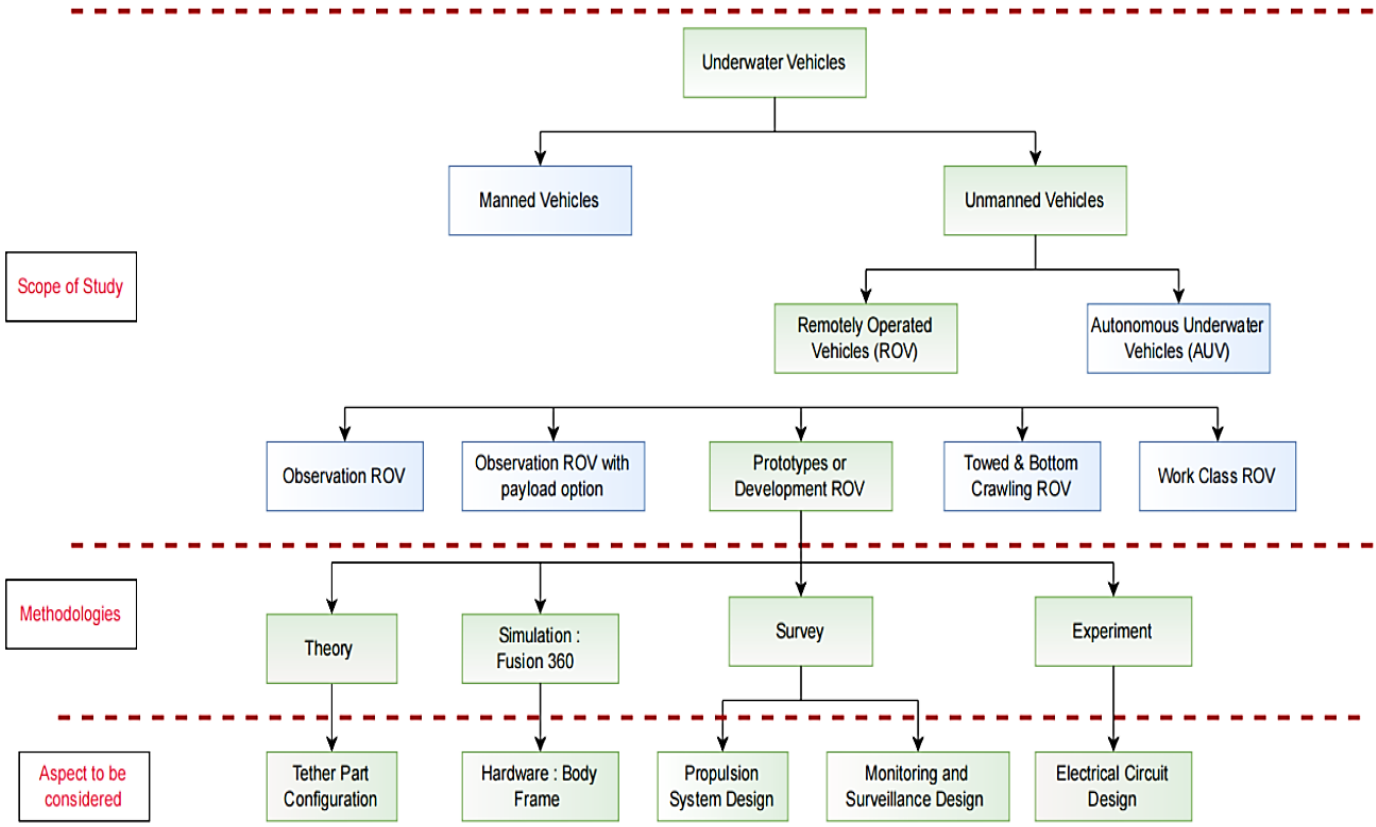

Figure 3. K-chart of the project

Table 2. Comparison of Different Designation ROV (Model 1 [21], Model 2 [22] and Model 3 [23])

Parameter	Model 1	Model 2	Model 3
	Manhole Inspection ROV	**Low-Cost ROV**	**Shallow water Inspection ROV**
Size (L x W x H)	700 mm x 250 mm x 250 mm	350 mm x 260 mm x 230 mm	540 mm x 340 mm x 310 mm
Mass (in air)	Less than 3 kg	1.6 kg	9.24 kg
Materials of the frame body	Acrylic	Polyvinyl chloride	Black anodized aluminum alloy
Stability	Neutral buoyancy than reduces drag	Additional form	Subsea polyurethane foam Slightly positive buoyancy in water
Ballast Tank	Nope	Nope	Nope
Propulsion system	4 thrusters (2 horizontal 90^2) (2 vertical 90^2)	3 thrusters (2 horizontal 90^2) (1 vertical 90^2)	6 thrusters (4 horizontal 45^2) (2 vertical 90^2)
Computer Control System	PC & LAN hub	Arduino Nano	Arduino Nano & Raspberry Pi 3D
Tether length	25 meters	22 meters	12meters
Max depth	20 meters	20 meters	10 meters
Camera	1 waterproof camera	Nope	1 Raspberry Pi camera

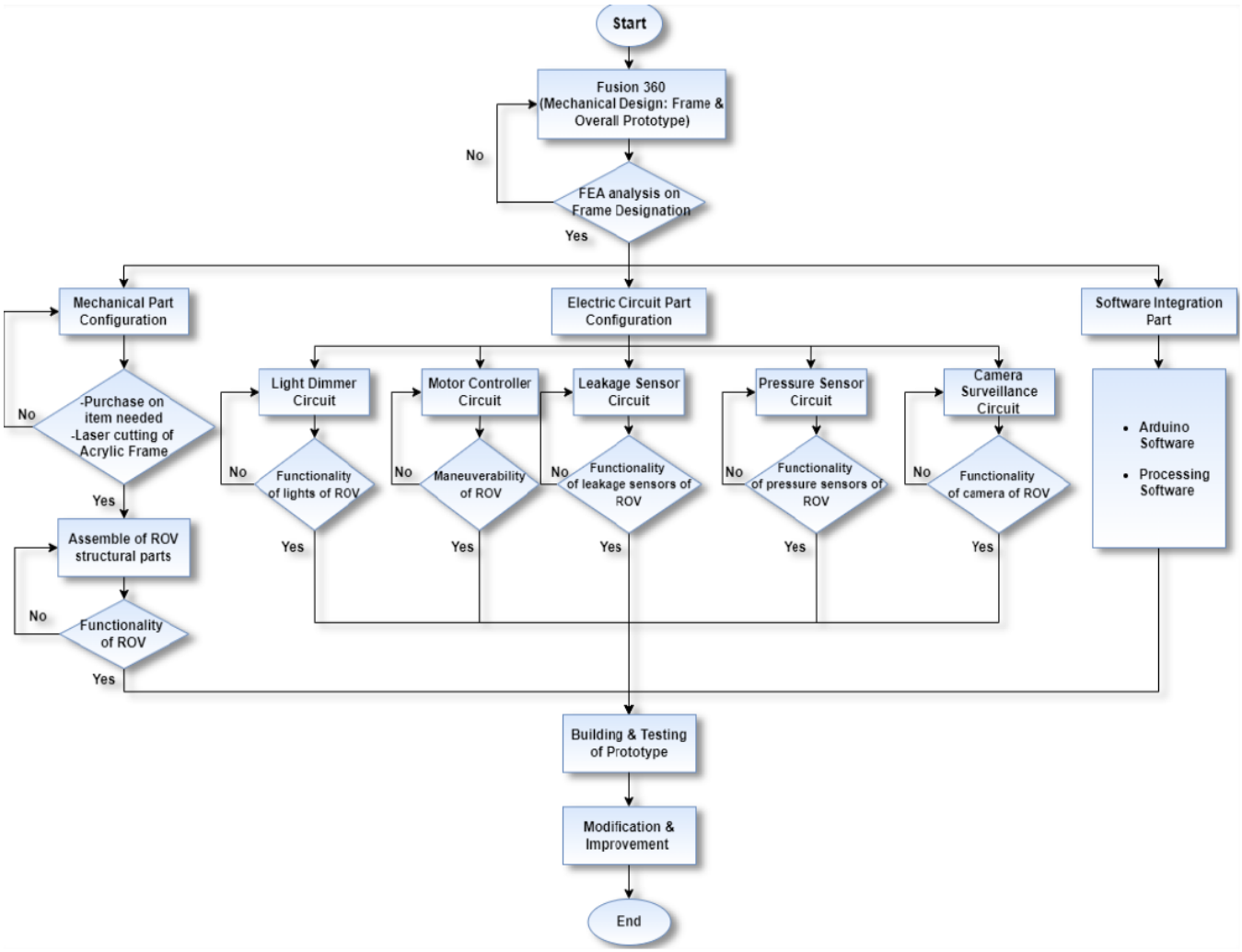

Figure 4. Flow chart of the project

Figure 7 shows the electric wiring of the overall ROV electric circuit. The configuration of thrusters on a remotely operated vehicle (ROV) significantly impacts the functionality of the designed ROV. Different thruster configurations provide maneuverability, stability, and control degrees on the designed ROV [21, 24, 25]. For this project, 4 DOF ROVs with configurations of the thrusters are shown in Figure 8.

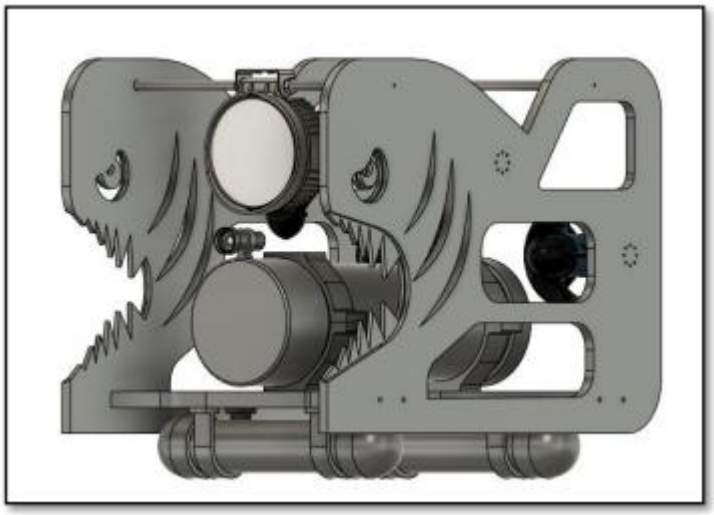

Figure 5. Overall prototype design

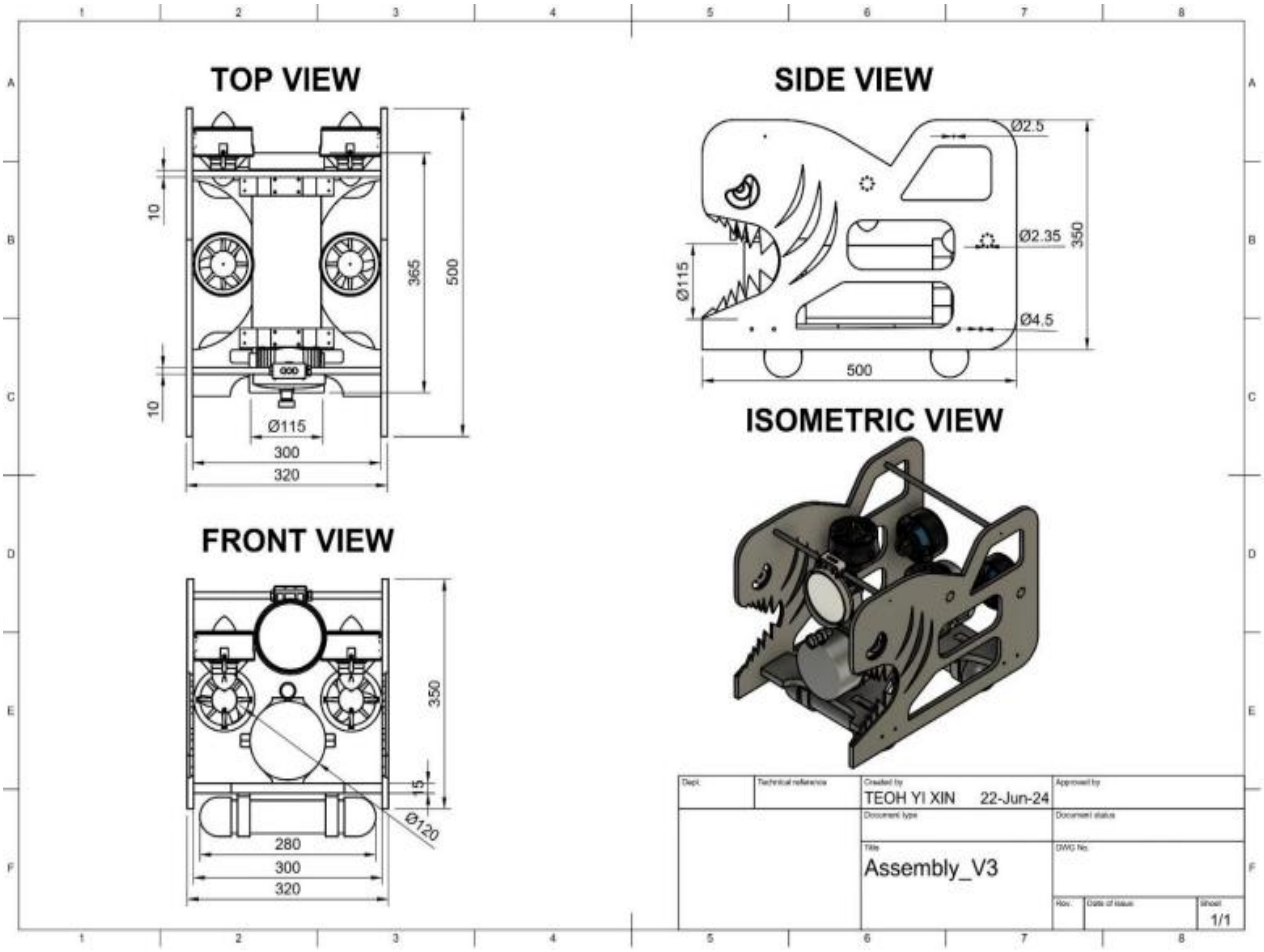

Figure 6. Orthographic projections for the prototype design

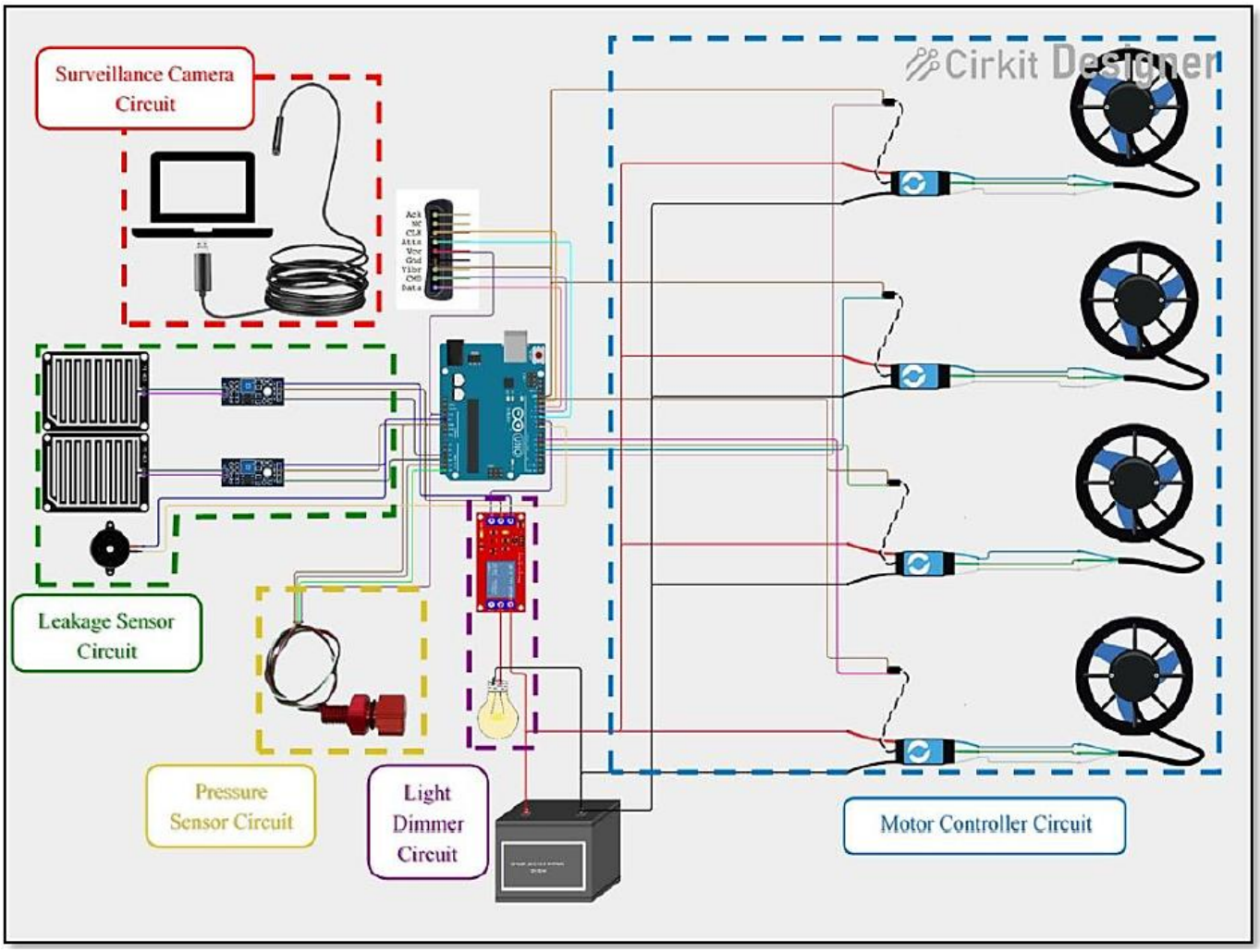

Figure 7. Overall electric circuit of ROV

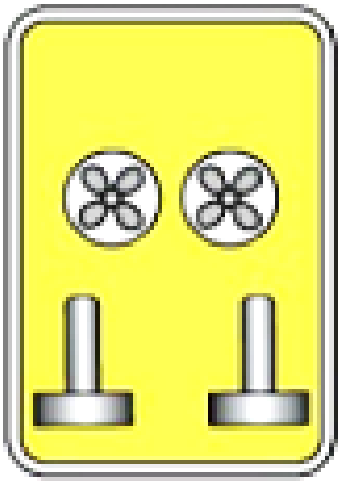

Figure 8. 4-thruster arrangement

There are requirements to be listed to design and develop a ROV, as tabulated in Table 3. Hence, the pairwise comparison method is used to determine the more important requirements that need to be prioritized during the designation of ROV [22, 23].

A conclusion can be made based on the score obtained for each requirement using the pairwise comparison method. In conclusion, the material of the body frame is the most important factor, followed by the propulsion system requirements and the size of the desired ROV. The material is the most crucial factor because a good material with the right buoyancy properties provides stability to the ROV [26]. The body frame's materials must withstand high pressure underwater and resist corrosion due to saltwater to ensure its longevity and reliability [27]. The size factor is important to the objective and the function of the ROV to be used. Besides, the propulsion system is important for ROV maneuverability [28]. In short, in the design process, the three criteria described above must be given higher priority. The selection and design of an ROV requires consideration of various factors, including the frame body's material, the electric housing's material, buoyancy and stability, thrusters, tethers, and sensors [29-31].

Table 3. Table of requirements and specifications on designed ROV

Requirements	Specification
Size	500 mm × 300 mm × 350 mm
Material	Acrylic (Body) Stainless steel (Connecting from body to body)
Stability	• Tubing sponge • 90% negative buoyancy in water • Cat 5 cables to reduce drag
Propulsion System	4 thrusters (T200 from blueROV) (2 horizontal 90°, 2 vertical 90°)
Computer Control System	Arduino Uno
Tether	Up to 50m
Depth	Up to 50m (testing depth 12ft at swimming pool
Vision system	1 camera
Sensor	Pressure sensor, sonar sensor, leakage sensor, IMU sensor, temperature sensor
Speed	0.35 m/s (0.68 Knots)

3.2. Mathematical Design

Based on the ROV developed in this project, 4-DOF designs are considered to simplify the dynamics equation of the ROV to be modeled. Then, the simulation implementation of the ROV depth motion dynamics equation and the mathematical modeling should be familiarized and understood. This is because simplifying this dynamic equation of motion becomes simple and easier. The first basic formula for deriving it is from Newton-Euler. Some parameters can be obtained from measurements and experiments, while others can be determined using Computer-Aided Design (CAD) software (e.g., SolidWorksTM).

3.2.1. Mass and Inertia Matrix

The general expression of the inertia matrix M can be considerably simplified by exploiting different body symmetries. With the ROV frame positioned at the center of gravity and since the vehicle is assumed

to be fairly symmetrical at all axes, the MRB can be simplified to a good approximation to Equation (1).

$$M_{RB} = \begin{bmatrix} m & 0 & 0 & 0 & 0 & 0 \\ 0 & m & 0 & 0 & 0 & 0 \\ 0 & 0 & m & 0 & 0 & 0 \\ 0 & 0 & 0 & I_X & 0 & 0 \\ 0 & 0 & 0 & 0 & I_Y & 0 \\ 0 & 0 & 0 & 0 & 0 & I_Z \end{bmatrix} \tag{1}$$

It can be seen from Equations (1) that the only parameter that needs identification for this matrix is the inertial moment about the z-axis corresponding to yaw. Analogous to the simplification of MRB, the added mass matrix, MA, becomes,

$$M_A = \begin{bmatrix} \dot{X}_u & 0 & 0 & 0 & 0 & 0 \\ 0 & 0 & 0 & 0 & 0 & 0 \\ 0 & 0 & \dot{Z}_w & 0 & 0 & 0 \\ 0 & 0 & 0 & 0 & 0 & 0 \\ 0 & 0 & 0 & 0 & 0 & 0 \\ 0 & 0 & 0 & 0 & 0 & \dot{N}_r \end{bmatrix} \tag{2}$$

Or

$$M_A = diag\{X_{\dot{u}}\ 0\ Z_{\dot{w}}\ 0\ 0\ N_{\dot{r}}\} \tag{3}$$

3.2.2. Hydrodynamic Damping Matrix

The hydrodynamic damping matrix, D (V), simplifies to the Equation (4),

$$D(v) = \begin{bmatrix} X_u + X_{u|u|}\,|u| & 0 & 0 & 0 & 0 & 0 \\ 0 & 0 & 0 & 0 & 0 & 0 \\ 0 & 0 & Z_w + Z_{w|w|}\,|w| & 0 & 0 & 0 \\ 0 & 0 & 0 & 0 & 0 & 0 \\ 0 & 0 & 0 & 0 & 0 & 0 \\ 0 & 0 & 0 & 0 & 0 & N_r + N_{r|r|}\,|r| \end{bmatrix} \tag{4}$$

Or

$$D(v) = diag\left\{X_u + X_{u|u|}\,|u| \quad 0 \quad Z_w + Z_{w|w|}\,|w| \quad 0 \quad 0 \quad N_r + N_{r|r|}\,|r|\right\} \tag{5}$$

3.2.3. Gravitational and Buoyancy Vector

The center of gravity is denoted as rG = [0 0 0]T, while the center of buoyancy is denoted as rB = [xB yB zB]T. By experimental verification, rB was found to be rG to a good approximation (the center of the body is the same as the center of buoyancy force). This shows that the center of buoyancy is aligned with the center of gravity along the x and y-axis. The ROV's mass and volume were intentionally distributed, so the only misalignment between the centers of mass and buoyancy was via the z-axis. This distance

between the two centers provides the metacenter righting moment that passively controls the vehicle's roll and pitch, considering that the roll and pitch are negligible. Equation (6) significantly simplified Equation (7).

$$G = \begin{bmatrix} (B-W)\sin\theta \\ -(B-W)\sin\phi\cos\theta \\ -(B-W)\cos\phi\cos\theta \\ B\cos\theta(Z_B\sin\phi - y_B\cos\phi) \\ B\cos\theta(X_B\cos\phi\cos\theta - Z_B\sin\theta) \\ -B\cos\theta(X_B\sin\phi\cos\theta - y_B\sin\theta) \end{bmatrix} \tag{6}$$

Equation 6 indicates that the gravitational and buoyant forces acting on the vehicle only influence its heaving motion, as illustrated in Figure 5. This is expected, given that the centers of gravity and buoyancy are aligned along the x- and y-axis, and hence, the gravitational and buoyant forces should only affect the vertical movement.

$$G = \begin{bmatrix} 0 \\ 0 \\ -(B-W)\cos\phi\cos\theta \\ 0 \\ 0 \\ 0 \end{bmatrix} \tag{7}$$

4. Results and Discussions

The prototype of the ROV, as shown in Figure 9, will be analyzed in several experiments to ensure its good functionality from the aspects of strength, ability to withstand pressure up to the maximum diving depth of 5 meters, and safety factors. All these criteria can be tested in Experiment 1: Finite Element Analysis. Additionally, the ROV will be tested for aspects such as its waterproof body structure, buoyancy, and stability. The results obtained will then be tabulated in tables and analyzed.

These experiments are important to ensure that the ROV can perform effectively underwater. For the precise maneuverability of the ROV, it has been tested in terms of velocity and acceleration, including moving forward and backward, as well as raising and submerging. These experiments were conducted in two different venues, a lab and swimming pools, to ensure data accuracy. However, the experiments of turning right and left only took place in the lab pool because the swimming pool provides a controlled and calm environment, ensuring that external factors such as currents and waves do not affect the ROV's turning movements. By conducting a series of targeted experiments, the project aims to verify that the ROV meets all design criteria and can perform effectively in real-world underwater environments for underwater inspection.

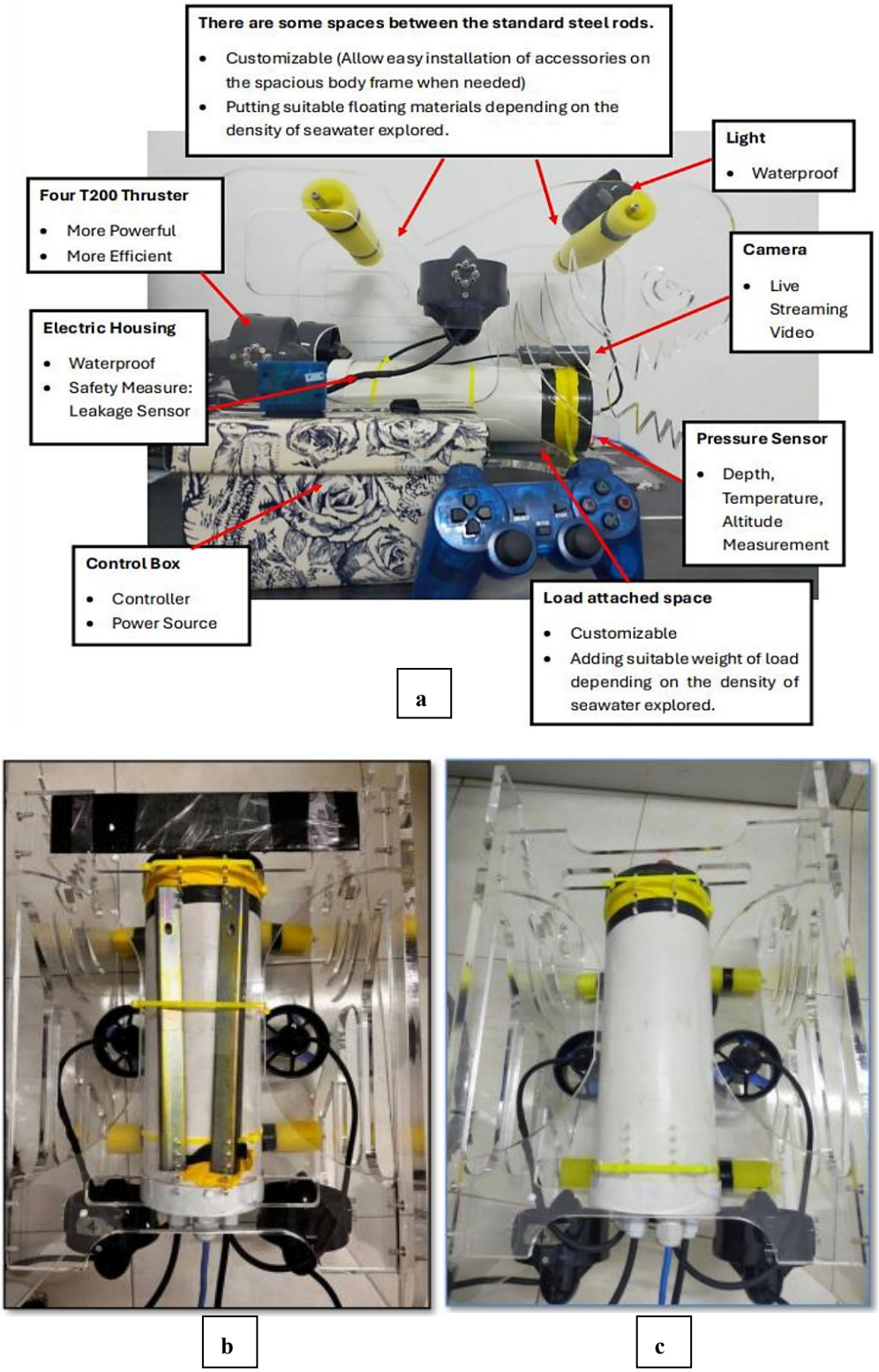

Figure 9. Components of designation ROV

Additionally, the integration of components such as lights, sensors, and cameras enhances the ROV's functionality. Generally, underwater environments lack natural light. Hence, lights are needed to provide clear visibility for the on-board camera. Moreover, the pressure, depth, and temperature sensors are critical components in an ROV, providing essential data to enhance safe operations precise navigation, and support scientific research. Additionally, the camera is crucial for inspection purposes in underwater tasks. A laptop

screen will be associated with a camera to provide live-streaming video. The function of each component is tabulated in Table 4.

Table 4. The function of each component in an electric circuit

No	Components	Functions
1	Thrusters T200	Provide the propulsion force for the ROV's forward, reverse, turn right, turn left, raising, and submerging motion. Controlled by the Arduino Uno via electronic speed controllers.
2	Arduino Uno	Act as a central processing unit, receiving and interpreting signals from the PS2 joystick (controller of ROV). Control outputs include lights and thrusters, which are activated based on joystick inputs. Reads data from various pressure and leakage sensors and provides real-time feedback by sending data to a connected computer.
3	Brushless Directional ESC (30A)	Regulate the power supplied to the thrusters based on the control signals from the Arduino. Adjusting the speed and direction of thrusters by interpreting the PWM signals from the Arduino. Connected between Arduino and thrusters, allowing the precise maneuverability of ROV.
4	PS2 Joystick	Provide users input for manually controlling the movement and functions of ROV. Connected to Arduino, which interprets joystick movement to control the thrusters, lights, and sensors
5	Light	Provide visibility for ROV during underwater inspection. Connected to Arduino's digital output pins. It is controlled by Arduino, which can switch the lights on or off based on the signal from the PS2 joystick.
6	Leakage Sensor	Detect the presence of water inside the ROV's electric housing. Connected to one of Arduino's analog input pins.
7	Buzzer	The buzzer emits a loud sound, alerting users to the presence of water inside the electric housing of the ROV. Connected to one of the Arduino's digital output pins.
8	Pressure Sensor	The sensor provides crucial data on pressure, temperature, and depth for analysis. Connecting the pressure sensor to the Arduino microcontroller for real-time data processing in ROV.
9	Waterproof Endoscope Camera	Provides visual feedback from underwater environments. Transmit live video feeds to operators through laptop screens, enabling real-time inspection and navigation.

The ROV features a surveillance camera system that enhances the efficiency and quality of underwater inspection tasks, as illustrated in Figure 11. The operator will receive live visual feedback to inspect underwater structures, marine life, or search areas. Integrating the camera with the control system enables synchronized movement through the camera, providing live visual feedback. This allows the operator to navigate and perform tasks underwater with ease, navigating around obstacles and debris with greater ease. It also helps the operator quickly understand the situation and condition of the surroundings around the ROV, rather than relying on meter readings and guessing from the observed data.

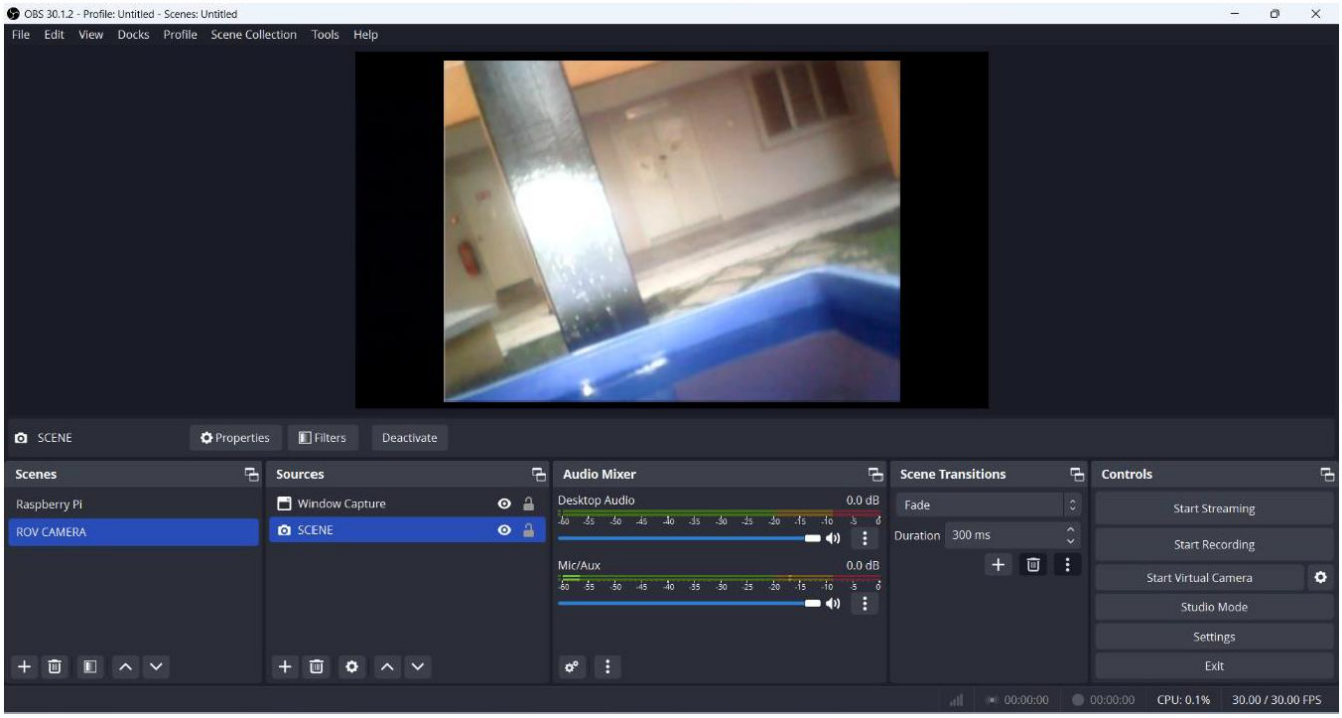

Figure 11. The live streaming video through OBS studio software (laptop screen)

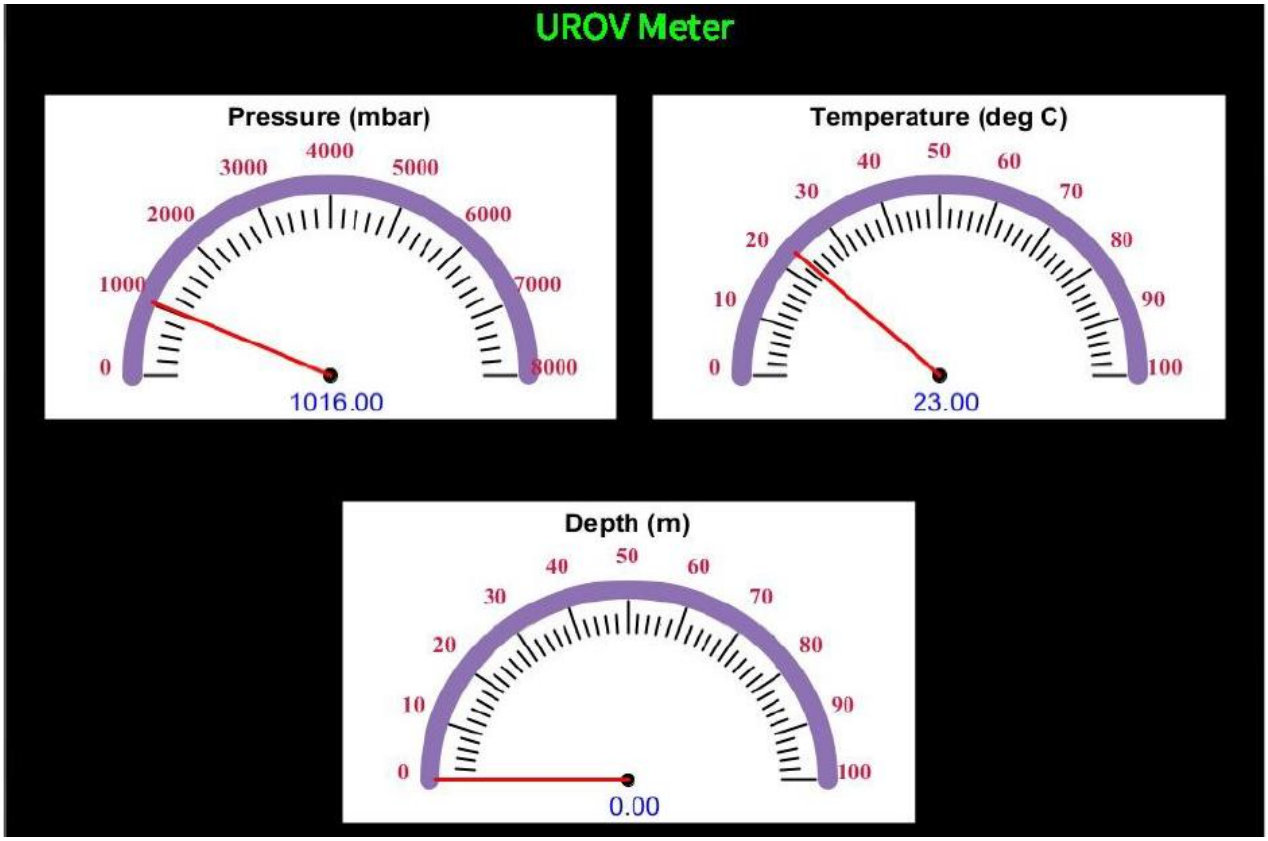

Figure 12. A graphical user interface (GUI) ROV

A graphical user interface (GUI) is developed for the ROV using a free and open-source processing software ideal for creating graphical interfaces, as shown in Figure 12. The program acts as an interface for interactions between the microcontroller and the user by processing inputs from the PS2 controller, sending

appropriate commands to the microcontroller according to the inputs processed, and receiving data such as water pressure, depth, and temperature from the attached sensors to be displayed as a data for the user, allowing real-time feedback to the user while observing the ROV prototype's behavior and its surrounding environment.

Several meters correspond to the live feedback and readings detected by the sensors on the ROV. This allows the user to stay updated and always be notified of the ROV's status, which is very useful when performing tasks underwater. In emergencies, the user can respond immediately if any meters show abnormal readings, such as extremely high pressure and depth, which might damage the ROV. Figures 13 and 14 show the results of the ROV testing in the swimming pool and lab tank.

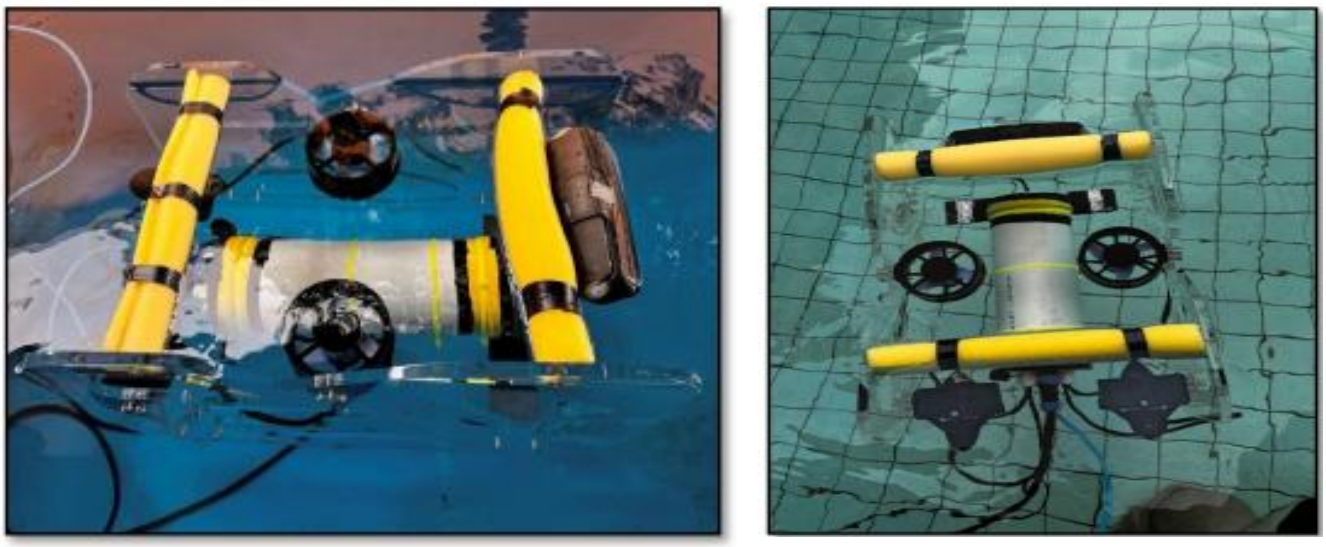

(a) Lab pool (b) Swimming pool

Figure 13. ROV achieved negativity 90% buoyancy in the lab pool

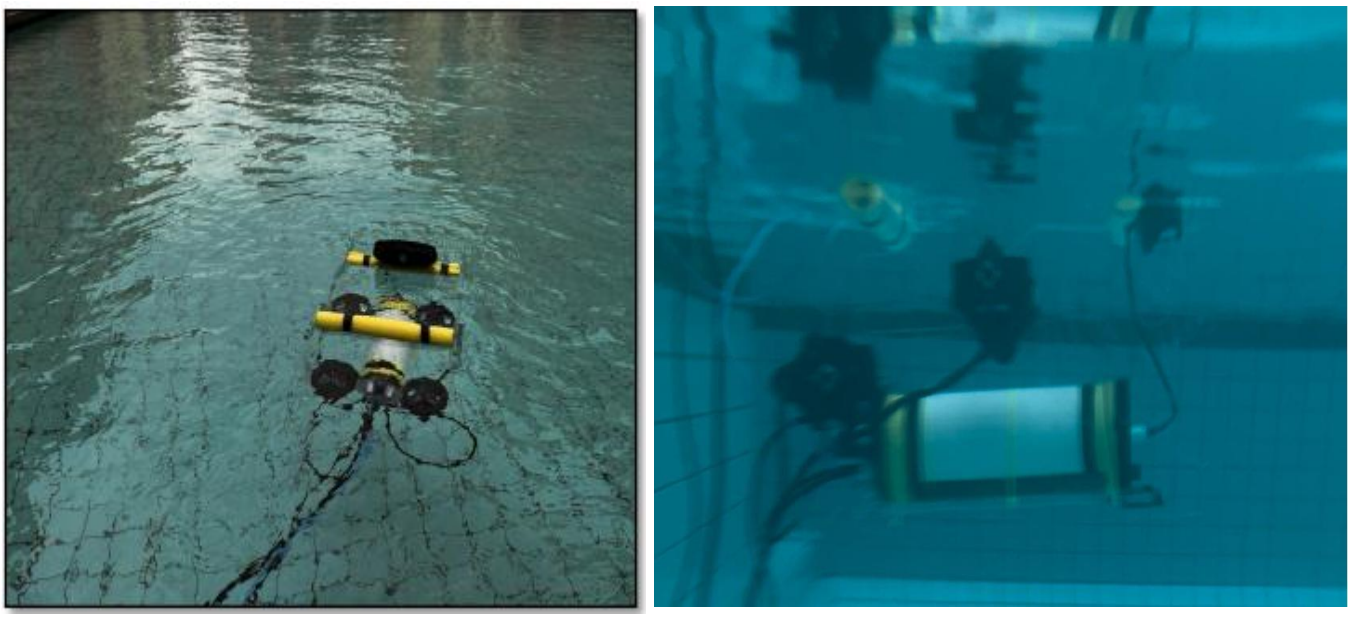

Figure 14. ROV turns right and left and submerges in the swimming pool

Table 5 (a) shows that the time taken for ROV is recorded at regular intervals of 0.2 meters and (b) that the time taken for ROV is recorded at regular intervals of 0.5 meters.

Table 5. Time taken for ROV on forward motion

(a) intervals of 0.2 meters (lab tank)

Distance (m)	Time Taken (s)			
	Test 1	Test 2	Test 3	Average
0	0	0	0	0
0.2	0.3	0.2	0.2	0.2333
0.4	0.7	0.6	0.4	0.5667
0.6	1.0	0.9	0.7	0.8667
0.8	1.3	1.2	1.0	1.1667
1.0	1.7	1.6	1.3	1.5333
1.2	2	1.9	1.6	1.8333
1.4	2.2	2.1	1.9	2.0667
1.6	2.7	2.4	2.1	2.4000
1.8	3.0	2.6	2.4	2.6667
2.0	3.4	3.0	2.6	3.000
2.2	3.7	3.3	3.0	3.3333
2.4	4.0	3.8	3.5	3.7667

(b) intervals of 0.5 meters (swimming pool)

Distance (m)	Time Taken (s)			
	Test 1	Test 2	Test 3	Average
0.00	0.00	0.00	0.00	0.0000
0.50	0.70	0.90	0.60	0.7333
1.00	1.60	1.60	1.30	1.5000
1.50	2.00	2.30	2.10	2.1333
2.00	2.70	2.90	2.80	2.8000
2.50	3.30	3.40	3.60	3.4333
3.00	4.10	4.30	4.30	4.2333
3.50	4.90	5.00	5.00	4.9667
4.00	5.40	6.40	5.70	5.8333
4.50	6.10	6.50	6.40	6.3333
5.00	7.00	7.00	7.00	7.0000
5.50	7.50	7.80	7.50	7.6000
6.00	8.00	8.50	8.30	8.2667

Table 6. Performance of ROV on forward motion (tank)

Distance (m)	Average time Taken (s)	Velocity (m/s)	Acceleration (m/s²)
0	0	0	0
0.2	0.2333	0.8573	3.6745
0.4	0.5667	0.7058	1.2455
0.6	0.8667	0.6923	0.7988
0.8	1.1667	0.6857	0.5877
1.0	1.5333	0.6522	0.4253
1.2	1.8333	0.6546	0.3570
1.4	2.0667	0.6774	0.3278
1.6	2.4000	0.6667	0.2778
1.8	2.6667	0.6750	0.2531
2.0	3.0000	0.6667	0.2222
2.2	3.3333	0.6600	0.1980
2.4	3.7667	0.6372	0.1692

The experiment was conducted in different venues, including the swimming pool and lab pool, as shown in Table 6-8, and has successfully demonstrated that ROV achieved consistent speeds in both forward and backward motions. Besides, the velocity measurements have also confirmed that the ROV can maintain a stable speed in a designated direction of about 0.6 to 0.7 m/s. On the other hand, ROV's consistent performance has been shown in a symmetrical pattern of acceleration profiles during both acceleration and deceleration phases.

Table 7. Performance of ROV on forward motion (swimming pool)

Distance (m)	Average time Taken (s)	Velocity (m/s)	Acceleration (m/s²)
0.00	0.0000	0.0000	0.0000
0.50	0.7333	0.6818	0.9298
1.00	1.5000	0.6667	0.4444
1.50	2.1333	0.7031	0.3296
2.00	2.8000	0.7143	0.2551
2.50	3.4333	0.7282	0.2121
3.00	4.2333	0.7087	0.1674
3.50	4.9667	0.7047	0.1419
4.00	5.8333	0.6857	0.1176
4.50	6.3333	0.7105	0.1122
5.00	7.0000	0.7143	0.1020
5.50	7.6000	0.7237	0.0952
6.00	8.2667	0.7258	0.0878

The hypothesis was accepted as the ROV demonstrated similar speed, velocity, and acceleration in forward and backward motion. The objective has been successfully achieved. In conclusion, this has successfully proved that the ROV's propulsion system is balanced and capable of providing consistent performance in both forward and backward directions, which is especially important for underwater inspection.

Table 8. Time taken for ROV is recorded at regular intervals of 45 degrees

(a) right turning

Degree (°)	Time Taken (s)			
	Test 1	Test 2	Test 3	Average
0	0.0	0.0	0.0	0.0000
45	0.8	1.0	0.7	0.8333
90	1.6	1.8	1.3	1.5667
135	2.3	2.5	1.9	2.2333
180	2.8	2.9	2.6	2.7667

(b) left turning

Degree (°)	Time Taken (s)			
	Test 1	Test 2	Test 3	Average
0	0.0	0.0	0.0	0.0000
45	0.7	0.9	0.6	0.7333
90	1.7	1.5	1.1	1.4333
135	2.4	2.1	1.6	2.0333
180	2.7	2.9	2.4	2.6667

Table 9. Performance of ROV on turning right motion

Degree (°)	Average time Taken(s)	Angular Velocity(rad/s)	Angular Acceleration (rad/s²)
0	0.0000	0.0000	0.0000
45	0.8333	0.9425	1.1310
90	1.5667	1.0026	0.6400
135	2.2333	1.0550	0.4724
180	2.7667	1.1355	0.4104

Table 10. Performance of ROV on turning left motion

Degree (°)	Average time Taken(s)	Angular Velocity(rad/s)	Angular Acceleration (rad/s²)
0	0.0000	0.0000	0.0000
45	0.7333	1.0710	1.4605
90	1.4333	1.0960	0.7647
135	2.0333	1.1588	0.5699
180	2.6667	1.1780	0.4418

The experiment of turning right and left only took place in the swimming pool because it provided a controlled and calm environment, ensuring that external factors, such as currents and waves, did not affect the ROV's turning movements. Besides, the turning movement experiment differs from forward, backward, raising, and submerging movements, which are more fundamental and less sensitive to slight environmental variations. From Table 7, the time taken to turn right and left at 180 degrees was comparable. The angular velocity measurements were consistent for both turning directions, indicating similar rotational performance for ROV. Besides, the acceleration profile obtained was as symmetrical as the velocity profile, assuming uniform thrust and torque. The objective has been achieved, and the data obtained are tabulated in Tables 9 and 10. The hypothesis was validated as the ROV exhibited similar angular velocity and similar angular acceleration, as the turning times for both 180-degree right and left turns are almost the same. The results have shown that ROV's rotational performance is symmetrical, which is vital for ensuring that the ROV can effectively maneuver in tight spaces and maintain directional control. These characteristics are crucial for tasks that require precise orientation adjustments.

Tables 11 and 12 demonstrate that the ROV performs linear and angular movements efficiently and reliably in both laboratory and swimming pool settings. ROV has maintained its consistency in velocity for moving forward, backward, submerging, and raising movements across both test environments, with slightly higher velocities in the swimming pool. Additionally, the ROV demonstrated higher acceleration in the lab pool for both linear and vertical movements. This has shown faster response times compared to the swimming pool in a controlled environment. The ROV features a balanced yet slightly asymmetric angular control system for turning in both right and left motions.

Table 11. Average data on maneuverability of ROV

Direction	Lab Pool		Swimming Pool	
	Average Velocity (m/s)	Average Acceleration (m/s²)	Average Velocity (m/s)	Average acceleration (m/s²)
Forward	0.6331	0.6567	0.6513	0.2304
Backward	0.6324	0.7559	0.6774	0.2523
Submerge	0.19146	0.26004	0.1731	0.0968
Raise	0.16991	0.19612	0.1828	0.11501

The ROV is prone to rotating faster and accelerating more quickly to the left than to the right. This characteristic demonstrates that the ROV is well-designed for various underwater environments, offering robust and reliable performance with a slight edge in maneuverability in controlled settings. Hence, it is highly suitable for underwater inspection purposes because of its advantages in precise and responsive movement.

Table 12. Average data on turning left and right

Direction	Average Angular Velocity (rad/s)	Average Angular Acceleration (rad/s²)
Left	0.90076	0.64738
Right	0.82712	0.53076

The purpose of each experiment is based on the data provided, such as:

1. **Forward Motion Test (Lab Tank and Swimming Pool)**

   To measure the ROV's speed, acceleration, and stability in linear forward motion across different environments. This experiment evaluates the ROV's ability to maintain consistent speed and acceleration over increasing distances in both a controlled laboratory tank environment and a more realistic swimming pool setting. The goal is to evaluate the propulsion system's efficiency and consistency of performance.

2. **Turning Motion Test (Swimming Pool)**

   To determine the ROV's ability to turn both right and left at various angles (from 0° to 180°). This evaluates the ROV's rotational performance, including its angular velocity and acceleration. The symmetrical performance in turning in both directions indicates balanced maneuverability, essential for precise underwater navigation in tight spaces.

3. **Overall Maneuverability Comparison (Lab Pool vs. Swimming Pool)**

   To compare the ROV's overall performance in different environments by measuring average velocity and acceleration for linear and angular movements. This experiment highlights the ROV's responsiveness and maneuverability, determining its suitability for underwater inspection tasks, particularly in controlled vs. natural settings.

Each experiment collectively verifies the ROV's ability to operate efficiently and consistently, validating its design for real-world underwater inspection applications.

An ROV typically employs a combination of design features, control systems, and operational strategies to mitigate external disturbances, such as lateral current flow. Here is how the ROV can tackle these challenges:

1. **Thruster Configuration and Power:**

   The ROV features multiple thrusters strategically positioned to allow movement in all directions, including lateral stabilization. If a current pushes the ROV sideways, the control system automatically adjusts the power of opposing thrusters to counteract the force, helping maintain position and stability.

2. **Dynamic Positioning System (DPS):**

   Advanced ROVs use DPS technology, which uses sensors (such as gyroscopes, depth sensors, and Doppler Velocity Logs) to detect movement caused by currents. The system automatically adjusts the thrusters in real-time to keep the ROV stable and on course.

3. **Hydrodynamic Design:**

   The body of the ROV is designed to be streamlined, reducing drag and minimizing the impact of lateral currents. A low-profile design allows the water to flow smoothly around the ROV, helping it maintain stability.

4. **Ballast and Weight Distribution:**

   Proper weight distribution and ballast systems help keep the ROV neutrally buoyant and stable in the water. This ensures that even when external currents act on the ROV, they don't tip or drift excessively.

5. **Operator Control and Manual Corrections:**

   Operators can manually adjust the ROV's movements in stronger currents by compensating for drift. They can increase thruster power or adjust the heading to counteract external forces.

6. **Real-Time Monitoring and Feedback Systems:**

   Sensors continuously monitor the ROV's position and movement, providing live feedback to operators. This allows for quick adjustments to maintain the intended path or position.

7. **Tether Management System (TMS):**

   For tethered ROVs, the TMS helps manage cable drag, which can be affected by water currents. A properly managed tether reduces additional lateral force on the ROV.

In our experiment, the controlled swimming pool environment likely minimized the impact of lateral currents. However, these systems and strategies ensure the ROV maintains stability and precision for real-world applications, especially during underwater inspections in unpredictable environments.

5. Conclusions

The planned ROV can dive to a maximum depth of 5 meters below. The prototype was designed in Fusion 360 and tested using FEA analysis, demonstrating its ability to withstand pressures of up to 50.3

kPa while maintaining structural integrity. Furthermore, obtaining 90% negative buoyancy by attaching a 0.8 kg load improves stability, control, and inspection accuracy. The configurable ballast system enables weight adjustments according to varying seawater densities, thereby increasing versatility.

The electric housing was waterproofed and thoroughly tested for water penetration to ensure full performance. A leakage sensor with a buzzer provides additional safety by alerting individuals to potential threats. The ROV's capabilities are further enhanced by integrating a Bar02 pressure sensor and a water-proof camera, which provide real-time data and visual feedback for effective underwater research.
Ultimately, the ROV meets all design requirements, demonstrating excellent stability, precise control, and dependability for underwater inspections and marine research applications.

Funding: The authors declare that no funding was received for this research.

Declaration of Competing Interest: The authors declare they have no known competing interests.

Research Involving Human/Animal Participants: This article does not involve any studies conducted by authors on animals or human participants.

References

[1] A. F. Molland, *The maritime engineering reference book: a guide to ship design, construction and operation*. Elsevier, 2011.

[2] J. Giertsen, E. Sandstad, I. Morild, G. Bang, A. Bjersand, and S. Eidsvik, "An explosive decompression accident," *The American Journal of Forensic Medicine and Pathology,* vol. 9, no. 2, pp. 94-101, 1988, doi: http://dx.doi.org/10.1097/00000433-198806000-00002.

[3] P. Esmaeili, M. Rafei, M. Salari, and D. Balsalobre-Lorente, "From oil surges to renewable shifts: Unveiling the dynamic impact of supply and demand shocks in global crude oil market on US clean energy trends," *Energy Policy,* vol. 192, p. 114252, 2024, doi: http://dx.doi.org/10.1016/j.enpol.2024.114252.

[4] M. Aras, S. Abdullah, F. Azis, M. Zambri, and M. Basar, "Auto depth control for underwater remotely operated vehicles using a flexible ballast tank system," *Journal of Telecommunication, Electronic and Computer Engineering (JTEC),* vol. 7, no. 1, pp. 57-64, 2015.

[5] O. A. Aguirre-Castro *et al.*, "Design and Construction of an ROV for Underwater Exploration," *Sensors,* vol. 19, no. 24, p. 5387, 2019, doi: http://dx.doi.org/10.3390/s19245387.

[6] J. Li, W. Li, Q. Liu, B. Luo, and W. Cui, "Current status and technical challenges in the development of biomimetic robotic fish-type submersible," *Ocean-Land-Atmosphere Research,* vol. 3, p. 0036, 2024, doi: http://dx.doi.org/10.34133/olar.0036.

[7] T. Ura, "Development timeline of the autonomous underwater vehicle in Japan," *Journal of Robotics and Mechatronics,* vol. 32, no. 4, pp. 713-721, 2020, doi: http://dx.doi.org/10.20965/jrm.2020.p0713.

[8] M. Aliff, N. Raihan, I. Yusof, and N. Samsiah, "Development of remote operated vehicle (ROV) control system using Twincat at main control pod (MCP)," *Int. J. Innovative Technol. Exploring Eng,* vol. 8, p. 12, 2019, doi: http://dx.doi.org/10.35940/ijitee.L4019.1081219.

[9] R. D. Christ and R. L. Wernli Sr, *The ROV manual: a user guide for remotely operated vehicles*. Butterworth-Heinemann, 2013.

[10] A. Konoplin, N. Konoplin, and A. Yurmanov, "Development and field testing of a smart support system for ROV operators," *Journal of Marine Science and Engineering,* vol. 10, no. 10, p. 1439, 2022, doi: http://dx.doi.org/10.3390/jmse10101439.

[11] K. R. Deepika and N. J. Kumar, "Design optimisation of a pressure hull for dynamic loading," *Int. J. Eng. Sci. Innov. Technol,* vol. 2, pp. 562-586, 2013.

[12] A. Meschini, A. Ridolfi, J. Gelli, M. Pagliai, and A. Rindi, "Pressure hull design methods for unmanned underwater vehicles," *Journal of Marine Science and Engineering,* vol. 7, no. 11, p. 382, 2019, doi: http://dx.doi.org/10.3390/jmse7110382.

[13] K. Breddermann, P. Drescher, C. Polzin, H. Seitz, and M. Paschen, "Printed pressure housings for underwater applications," *Ocean Engineering,* vol. 113, pp. 57-63, 2016, doi: http://dx.doi.org/10.1016/j.oceaneng.2015.12.033.

[14] A. Jebelli, C. Yagoub, and S. Dhillon, "Design and implementation of an autonomous underwater vehicle (AUV) with PTFE," *Adv. Robot. Autom,* vol. 7, p. 185, 2018.

[15] R. Capocci, G. Dooly, E. Omerdić, J. Coleman, T. Newe, and D. Toal, "Inspection-class remotely operated vehicles—A review," *Journal of Marine Science and Engineering,* vol. 5, no. 1, p. 13, 2017, doi: http://dx.doi.org/10.3390/jmse5010013.

[16] D. Naylor and S. S. Tsai, "Archimedes' principle with surface tension effects in undergraduate fluid mechanics," *International Journal of Mechanical Engineering Education,* vol. 50, no. 3, pp. 749-763, 2022, doi: http://dx.doi.org/10.1177/03064190211055431.

[17] D. Ting, *Thermofluids: from nature to engineering*. Academic Press, 2022.

[18] M. U. Mohd Ubaidillah bin Mohd Kamal, "Design of A Ballast Tank For A Small Underwater Remotely Operated Vehicle (ROV)," 2008.

[19] M. M. B. Mohamad, "Remotely Operated Vehicle (ROV) Prototype," Final Year Project, Universiti Teknologi Petronas, Malaysia, 2012.

[20] W. Wang, S. Pang, T. Wu, and B. Han, "ArduinoSub—a low-cost ROV kit for ocean engineering education," in *OCEANS 2019 MTS/IEEE SEATTLE*, 2019: IEEE, pp. 1-6, doi: http://dx.doi.org/10.23919/OCEANS40490.2019.8962404.

[21] T. Nagakita and T. Sakaue, "Development of ROV for underground power transmission equipment inspection in submerged manhole," presented at the *Proc. IFAC World Congr*, Düsseldorf, Germany, 2020.

[22] A. Tanveer and S. M. Ahmad, "Design of a Low-Cost Prototype Underwater Vehicle," *arXiv preprint arXiv:2303.13063,* 2023.

[23] P. Tarwadi, Y. Shiraki, O. Ganoni, S. Wei, H. S. Ahn, and B. MacDonald, "Design and development of a robotic vehicle for shallow-water marine inspections," *Proceedings Australasian Conference on Robotics and Automation,* Queensland, Australia, pp. 1-8, 2020.

[24] R. D. Christ and R. L. Wernli Sr, *The ROV manual: a user guide for observation class remotely operated vehicles*. Elsevier, 2011.

[25] C. Viel, "Self-management of the umbilical of a ROV for underwater exploration," *Ocean Engineering,* vol. 248, p. 110695, 2022, doi: http://dx.doi.org/10.1016/j.oceaneng.2022.110695.

[26] Y. Zhang, Q. Zhang, A. Zhang, Y. Sun, and Z. He, "Development and experiments of a novel deep-sea resident ROV," in *2021 6th International Conference on Control and Robotics Engineering (ICCRE)*, 2021: IEEE, pp. 129-134, doi: http://dx.doi.org/10.1109/ICCRE51898.2021.9435653.

[27] P. Trslić, "Autonomous docking for work class ROVs," University of Limerick, 2020.

[28] J. D. Hernández *et al.*, "Autonomous underwater navigation and optical mapping in unknown natural environments," *Sensors,* vol. 16, no. 8, p. 1174, 2016, doi: http://dx.doi.org/10.3390/s16081174.

[29] T. Kato, Y. Kawamura, J. Tahara, S. Baba, and Y. Sanada, "Development of side thruster system for ASV," in *ISOPE*

International Ocean and Polar Engineering Conference, 2020: ISOPE, pp. ISOPE-I-20-2128.

[30] J. Lam, A. Chen, A. Bennett, and M. Triantafyllou, "Propeller Characterization Testing of a Blue Robotics T200 Thruster," in *OCEANS 2023-Limerick*, 2023: IEEE, pp. 1-8, doi: http://dx.doi.org/10.1109/OCEANSLimerick52467.2023.10244513.

[31] M. Fernandes, S. R. Sahoo, and M. Kothari, "An Open Source, Low Cost, 3D Printed Thruster For Autonomous Underwater and Surface Vehicles," in *2022 IEEE/OES Autonomous Underwater Vehicles Symposium (AUV)*, 2022: IEEE, pp. 1-6, doi: http://dx.doi.org/10.1109/AUV53081.2022.9965889.